Lesson 5 Wonderful Stacking

Scene lead-in

There have been three industrial revolutions in human history. The first industrial revolution was marked by the use of steam engines from the 1760s to the mid-18th century. Humans entered the “Steam Age”; in the late 1860s, with the economic development of capitalist countries, electric appliances replaced steam engines and were used widely, and the second industrial revolution emerged, therefore, humans entered the "Electrical Age". In the 1940s and 1950s, with the invention of scientific technologies such as atomic energy and electronic computers, humans entered the third scientific and technological revolution age.

Human beings have entered the era of the third scientific and technological revolution. After the three technological revolutions, the production mode has been changed from manual work to mechanical production, and goods are manufactured in large batches. However, with the advancement of science and technology and continuous development of society, people have become increasingly particular about goods, and those with similar forms cannot satisfy people's pursuit of individualism. In this way, the fourth industrial revolution has arrived quietly, which can perfectly solve this problem.

3D printing technology was born with the arrival of the fourth industrial revolution and has been integrated into all aspects of our lives. It breaks through the concept of traditional printing and allows us to build a three-dimensional structure on a plane. 3D printing is widely used in mold manufacturing, industrial design and other fields, and then gradually used in direct manufacturing of some products, such as jewelry, footwear, architecture, automobiles, aerospace, dental and medical industries and education.

Creative design

3D printing is the quickest way to get stereographic objects, so what is the process and principle of 3D printing? Read the following information to understand the steps of 3D printing.

3D printing process

The working principle of 3D printing is basically the same as that of ordinary printing, except for the printing materials. Different printing materials such as metal, ceramic, plastic and sand can be used by a 3D printer. After it is connected to a computer, the blueprint on the computer is finally converted into a physical object through computer control.

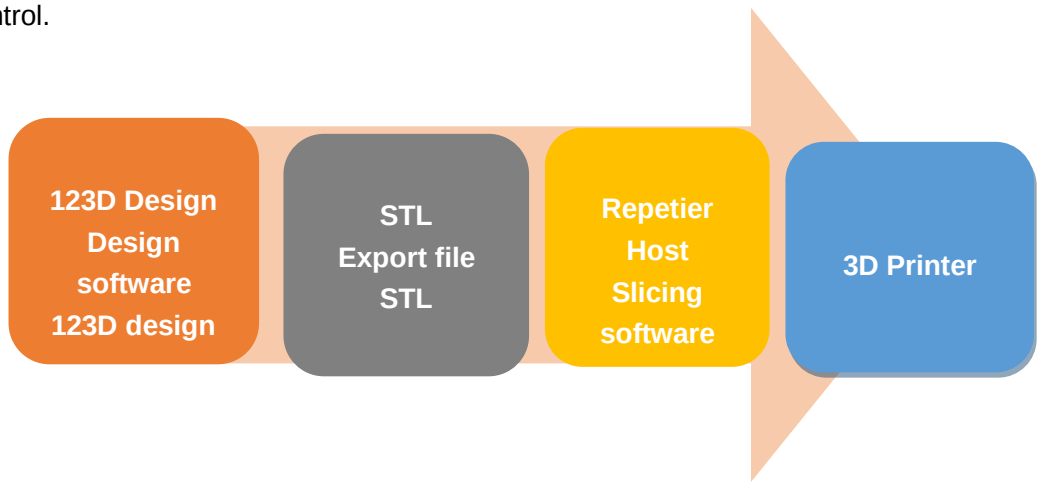

3D printing principle

3D printing is one of the rapid prototyping technologies. Based on digital model files, it shapes objects with adhesive materials such as powdered metal or plastic through the technology of "layered manufacturing and layer-by-layer stacking".

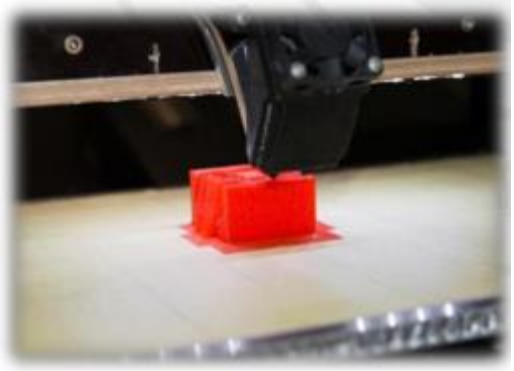

https://www.youtube.com/watch?v=AW-8EVRI5H8
Whole process of 3D printing

To complete 3D printing, one of the most important steps is 3D modeling. 3D modeling involves using a three-dimensional maker to build a model with three-dimensional data in the virtual three-dimensional space. Today, let's learn a 3D modeling software with easy operation together - 123D Design.

123D design

123D Design is a set of modeling software which is suitable for common users, published by Autodesk (launching well-known AutoCAD software). The software series provides the user with various ways to generate 3D models: Simply and directly drag the 3D model and edit it for modeling; or process the photographed digital photos directly into the 3D model in the cloud; if you like DIY, 123D series software also provides various ways for the user who likes DIY to create the model. Everyone can easily use 123D series products without complex professional knowledge.

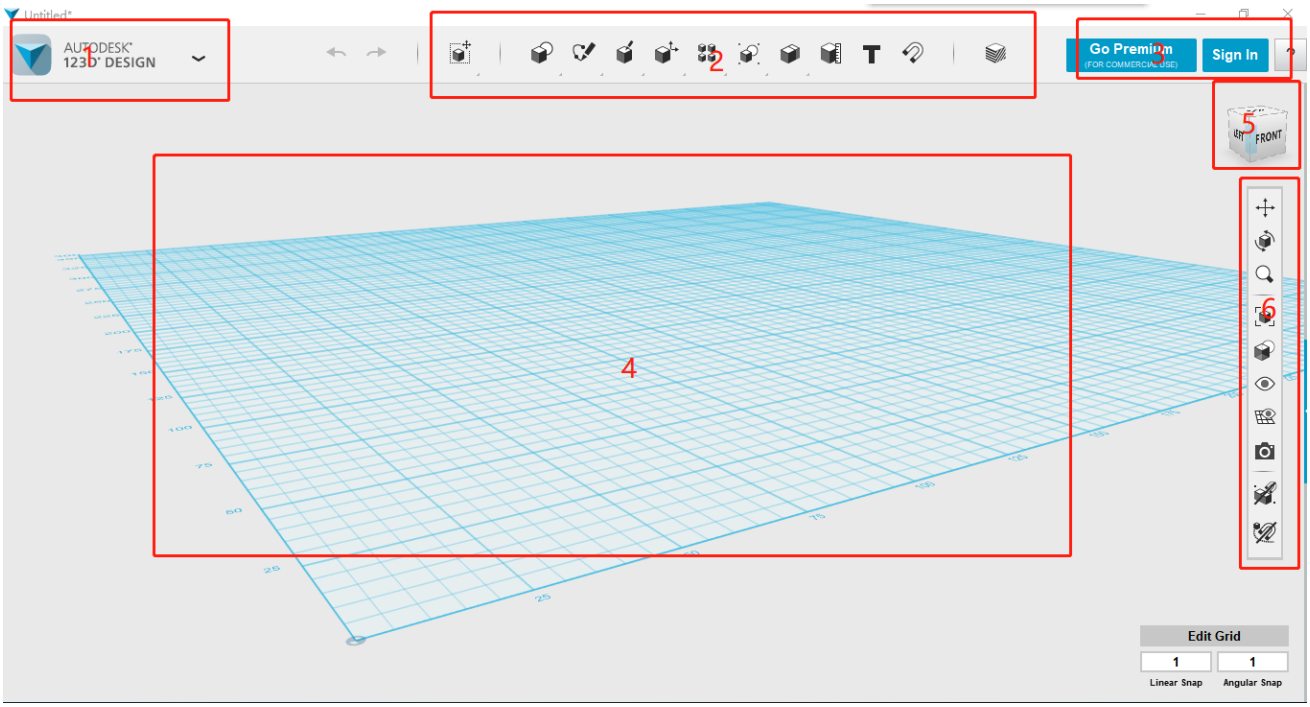

Main interface of 123D Design software

① Application menu contents: Display basic function commands of the software. (New, Open, Save, Export, etc.)

② Instructions menu contents: Display instructions related to modeling.

③ Login information window: Display the information of users logged in the website.

④ Operation window: It is the operation window for design and modeling.

⑤ View cube: Adjust the perspective angle of the object.

⑥ Display menu: Display the function button of track mode and size.

Try to use the view navigation, direction keys, and three keys (left, middle and right) of the mouse to view and move the blocks, and create various interesting models.

Use 123D Design

4) Create a basic object

The first row of the Command toolbar includes some basic object setup tools. Basic objects given by 123D Design are hexahedron, cylinder, torus, cone, sphere and ellipsoid. Modeling methods are essentially the same. Now, let's create a hexahedron.

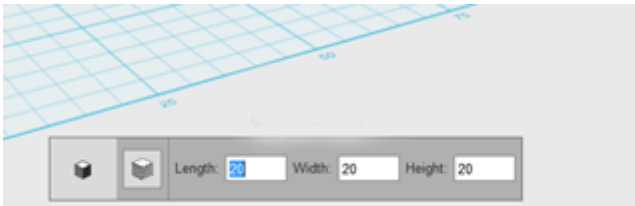

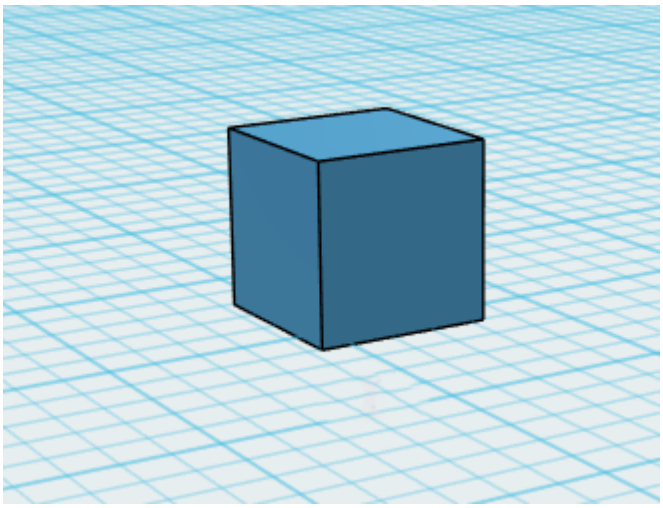

Create the simple combination shown in the figure below.

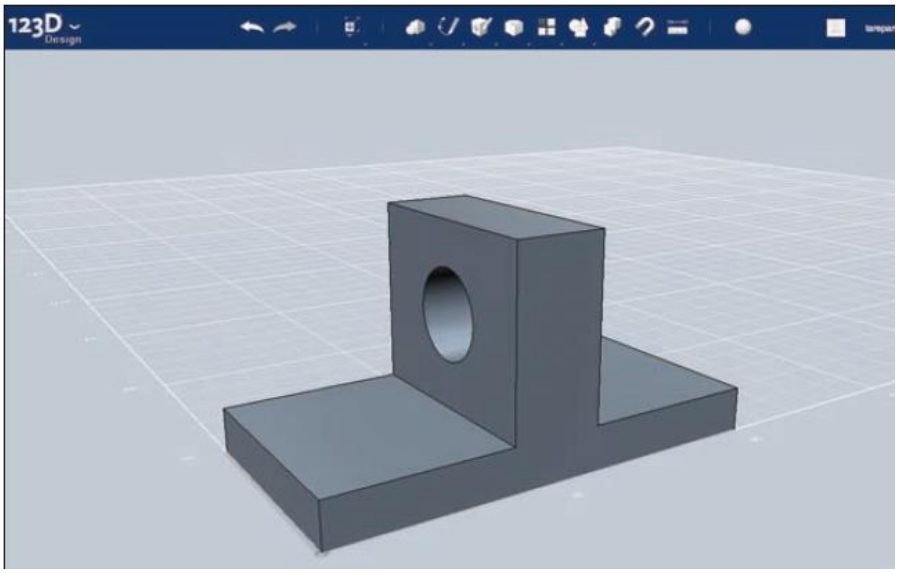

Project practice: a unique birthday gift

Project requirements: Design a unique and useful pen container by using 123D Design.

Project score: 1 Pen container design (30%)

2 Pen container modeling (70%)

This Sunday is Xiaomei's birthday. She is a good friend of Youyou, so Youyou wants to give her a pen container as a birthday gift. However, Youyou did not find a proper one in any of the stationery shops she visited, because some of them looked unattractive, while others lacked distinctive features. Since her best friend's birthday is coming, Youyou is so worried and wonders what she can do?

Please help Youyou to design a unique and useful pen container by using 123D Design! Then record operation steps below.

5) Hand-painted draft of the pen container

64 Model the pen container drawn

Step 1:

_____

_____

Step 2:

_____

_____

Step 3:

_____

Sharing and evaluation

1 Show the completed pen container modeling and briefly introduce your design concept and the work meaning.

Photos of the modeling

2 Discuss the influence of the 3D printing technology on life

Comprehensive evaluation

Sum up the learning contents of the class, and evaluate it.

Evaluation method	Evaluation phase	Evaluation contents	Evaluation criteria		
			3 Excellent	2 Good	1 General
Self-evaluation	**Scene creation lead-in**	• Learn about the prominent technology of industry 4.0.			
	Creativity	• Be able to design an artistic work.			
	Ability to solve problems	• Be able to create a model by using 123D Design according to the task requirements.			
	Engagement	• Participate in class discussion and express ideas actively			
	Team collaboration	• Be able to cooperate with others.			

Nous contacter !

0 820 820 081
Service 0,12 € / min
+ prix appel

Technologie Services
Zi du Gavé
42330 Saint-Galmier
Fax : 04 77 94 55 14
Mail : contact@technologieservices.fr

Inscrivez-vous !

Visitez notre

Site internet

www.technologieservices.fr

Un espace dédié

- Écoles primaires
- Technologie collège
- Lycées technologiques
- Lycées professionnels
- Arts plastiques
- Matériel d'équipement
- Matériel audiovisuel et bureautique

Et toujours la possibilité d'établir des devis, de commander et de suivre vos commandes/factures en ligne.