Lesson 2: Invisible Strength

Scene lead-in

In terms of the physical requirements of modern logistics work, AI (artificial intelligence) technology can also be applied to provide many conveniences. AI robots, computer vision system, conversation interaction interfaces, automatic transportation tools and others are all practical manifestations of AI in logistics operations. Through the application of such new tools, the existing work force is enriched and strengthened.

In the future, in the face of tens of thousands of goods, we no longer need to deliver machines, scanning equipment, manual processing equipment and staff for sorting, but can instead use man-machine collaboration robots to accomplish these tasks. Through AI engines, different cameras and sensors can capture real-time data and then identify items through brand logos, labels and 3D forms, so that machines and people can sort and pick recyclables on moving conveyor belts at the same time.

AI robots can be used to sort and carry goods for logistics enterprises, thus eliminating the need for manpower and improving the efficiency of transportation. Let's try to achieve this goal with robotic arms.

Illustration of principles

Experiment 1: feeling atmospheric pressure

Press two plastic suction cups against each other face to face and then pull them from both sides. Why do you need more force to pull them apart?

Follow the following steps: (a) Take out two plastic suction cups; (b) press them against each other to force the air in the suction cups to get out of the suction cups; (c) pull hard from both sides.

Experiment 2: feeling differential pressure

Peel off the shell of a cooked egg. Follow the steps below to carry out the experiment and observe how the egg will change. Why does this happen?

(a) Put a layer of sand on the bottom of the bottle

(b) Put the lighted alcohol cotton into the bottle

(c) Place the cooked egg with its shell peeled off on the bottle mouth

Through activity 1 and 2, we learn that because _____,____the two relatively pressed suction___ and the cooked egg will_____

Atmospheric pressure is generated by _____. As air has fluidity, the direction of atmospheric pressure is _____,

It turns out that the robotic arm with the vacuum suction cup also makes use of the principle of _____

https://www.youtube.com/watch?v=KndNN28OcEI

Project practice: small handling project

Project requirement: Stack the three paper cups lying flat on the table top using a robotic arm.

Project score: The faster the speed is, the higher the score is.

Module I: Learning about the robotic arm

Technology knowledge center

The structure of the robotic arm (taking the Dobot robotic arm as an example) consists of the base, big arm, little arm and head from bottom to top. With the exception of Joint 4, which is connected by servo, the other three axes are connected by stepper motor, corresponding to four joints in turn (Joint 1, 2, 3 and 4). The robotic arm can rotate at a certain angle, as shown in the following figure.

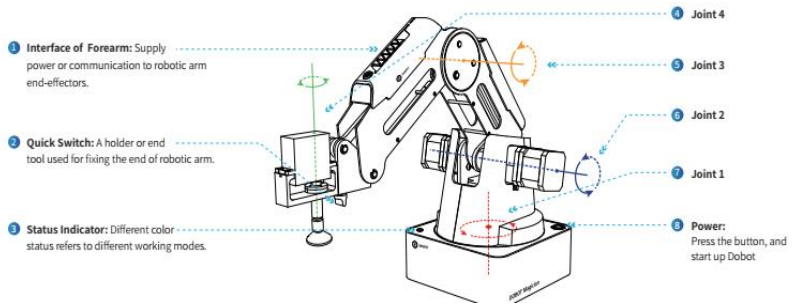

https://youtu.be/yrKs_JySBGU

Module II: Controlling the robotic arm

1 DobotStudio software and its connection

Introduction: DobotStudio software is the special control software for the Dobot robotic arm. After installation, we can control the robotic arm to move through the computer.

1) Open the DobotStudio software on the computer.

Select “English” in the pop-up dialog box during installation, and the interface will be displayed in “English” after the installation is completed, as shown in the following figure.

DobotStudio master interface

2) Connect the robotic arm with the computer via a USB cable.

After setting the port number, click the "Connect" button at the upper left corner of the interface. When the button is displayed as "Disconnected", the robotic arm has been successfully connected, as shown in the following figure.

3) Note: There are three buttons at the upper right corner of the software, as shown in the following figure.

Through the "Setting" menu, parameters related to each function can be set, which will be described in introducing corresponding functions.

When the "Return-to-zero" button is pressed, Dobot automatically rotates clockwise to the bottom, and then returns to the set Home point, which can be customized.

When the "Emergency Stop" is pressed, Dobot immediately stops all actions.

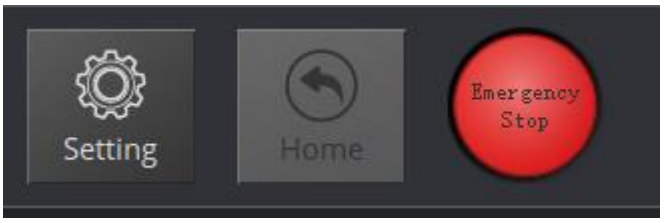

2 Connection of air pump and suction cup kit

1) Take out the suction cup kit

2) Connect the air pipe of the air pump box to the air pipe joint of the suction cup, as shown in the following figure.

3) Install the suction cup kit and air pump on the Dobot, as shown in the following figure.

Connect the power cord SW1 of the air pump box to the main control box interface SW1, and the signal wire is connected to the interface GP1. Put the suction cup kit through the wing nut to the end of the robotic arm; connect the Joint4 servo line GP3 to the arm interface GP3.

4) Set the end clamp as the "Suction Cup" through the Tools option menu, as shown in the following figure.

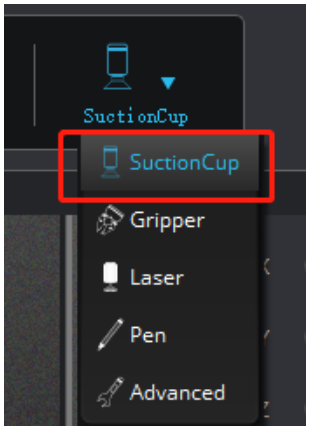

How to start the suction cup? Check the "Suction Cup" at the lower right corner of the operation panel, then the air pump works and the suction cups can suck objects.
Click again to uncheck the option, and then the air pump stops working and the suction cup releases the object.

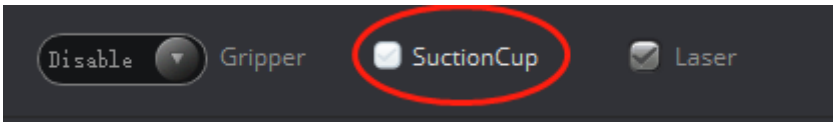

3 Motion of robotic arm controlled by mouse

1) Introduction to mouse control interface

Click the "Mouse" function module at the main interface to enter the corresponding mouse control interface, as shown in the following figure.

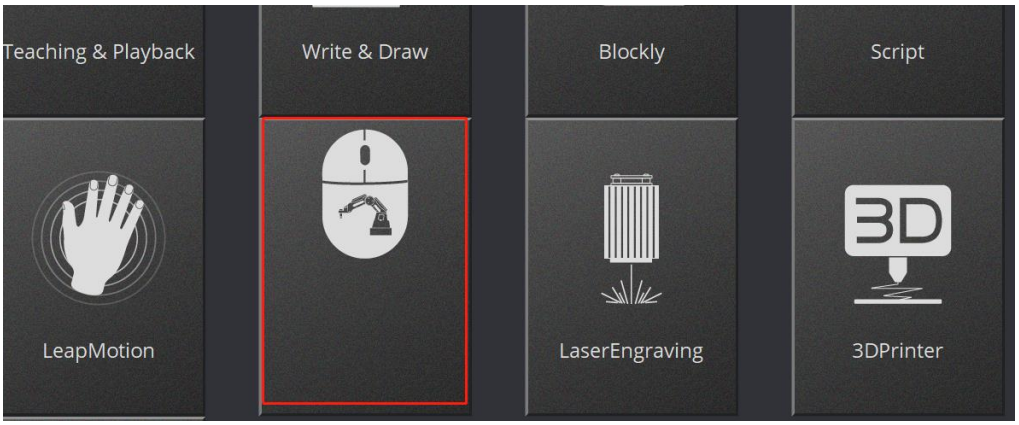

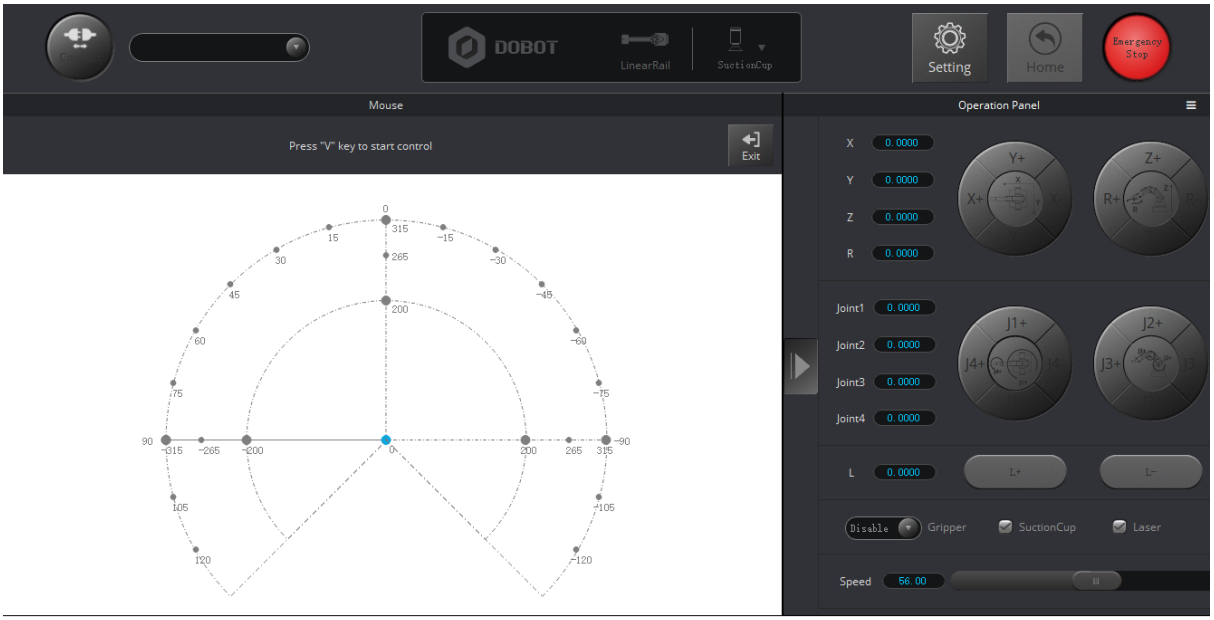

2) Mouse following mode

"Mouse following" refers to the fact that the robotic arm moves by operating the mouse. Position the mouse in the sector area, and press the "V" key to start control. The robotic arm moves along with the motion of the mouse, and the control process can be stopped by pressing the "V".

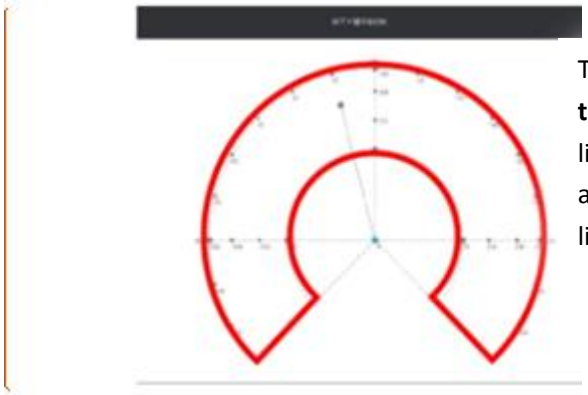

The range of activity of **the** robotic arm is limited **to** the sector area. Otherwise, the red light will be on.

3) Coordinate system control mode

The "coordinate system control mode" is a mode in which the robotic arm is operated by a spatial coordinate system. The coordinate system for the robotic arm is shown in the following figure.

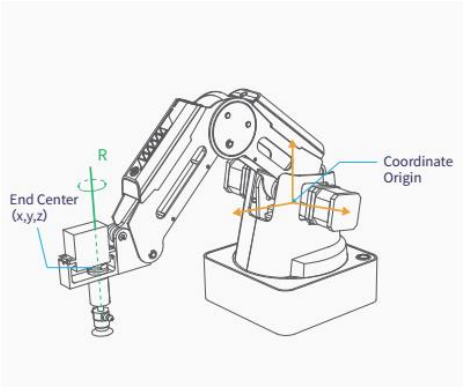

The robotic arm is controlled by clicking the button on the control panel, as shown in the following figure.

Compare the three modes for controlling robotic arms and complete the following tasks.

Step 1: Control the Z axis, set the suction cup at a position higher than a certain height, then control the X and Y axes respectively to move the suction cup right above the paper cup on the left side, then control the Z axis, drop the suction cup to the bottom of the cup, and start the suction cup to suck the paper cup.

Step 2: Control the Z-axis and lift the paper cup to a certain height with the robotic arm. Then control the X and Y axes respectively to move the suction cup directly above the paper cup in the middle, and close the suction cup.

Step 3: Repeat steps 1 and 2 to suck up the paper cup on the right.

4) Single axial control mode

The "single axis control mode" is a mode in which the robotic arm is operated through four joints which are shown in the following figure.

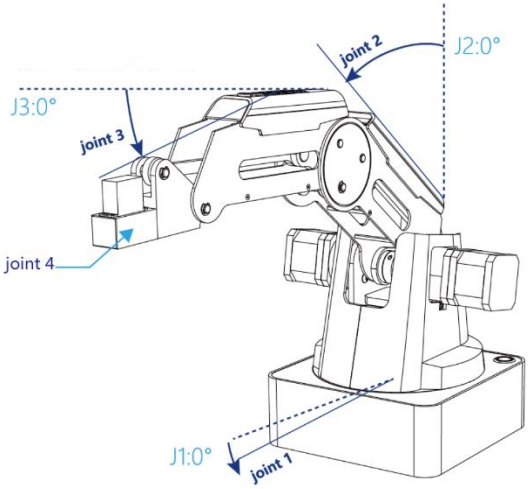

When the corresponding button is pressed for a long time, the servo corresponding to the robotic arm rotates independently; when it is released, the rotation stops, as shown in the following figure.

Knowledge sharing

Control mode	Experience of using the corresponding control mode
Mouse following mode	
Single axis control mode	

Comprehensive evaluation

Evaluation method	Evaluation phase	Evaluation contents	Evaluation criteria		
			3 Excellent	2 Good	1 General
Self-evaluation	**Scene creation lead-in**	• Understand the application of AI in the logistics Industry.			
	Creative design	• Understand the existence of atmospheric pressure and the principle of the vacuum suction cup.			
		• Learn about connection between DobotStudio and computers.			
		• Learn about three modes to control the robotic arm.			
	Planning and design	• Be able to actively participate in projects.			
Mutual evaluation	**Sharing evaluation**	• Be able to share summary of experience using the three modes.			

Nous contacter !

0 820 820 081
Service 0,12 € / min
+ prix appel

Technologie Services
Zi du Gavé
42330 Saint-Galmier
Fax : 04 77 94 55 14
Mail : contact@technologieservices.fr

Inscrivez-vous !

Visitez notre

Site internet

www.technologieservices.fr

Un espace dédié

- Écoles primaires
- Technologie collège
- Lycées technologiques
- Lycées professionnels
- Arts plastiques
- Matériel d'équipement
- Matériel audiovisuel et bureautique

Et toujours la possibilité d'établir des devis, de commander et de suivre vos commandes/factures en ligne.